USER MANUAL

Thank you for choosing Better Bathrooms.
Please read this manual before installing your product
and keep for future reference.

better bathrooms

Arched Mirrored Bathroom Cabinet with Lights 1200x700mm – Empire

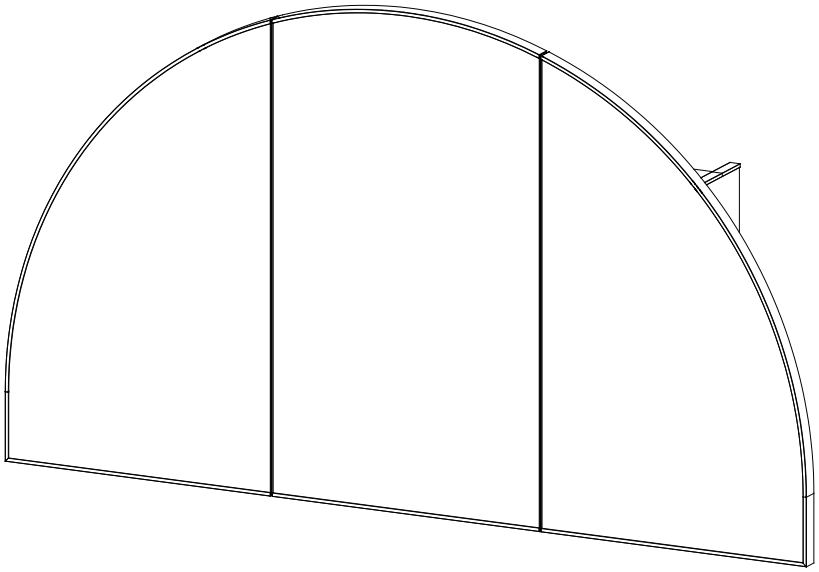

EMPIREC1200 – Frameless (Silver Sides)

EMPIRECBB1200 - Brass

EMPIRECMB1200 - Black

- INFRARED SENSOR
- DEMISTER
- IP44 INGRESS PROTECTION
- ALUMINIUM ALLOY DOOR
- WALL AMOUNT OR RECESSED MOUNT ARE AVAILABLE

V20260407

CONGRATULATIONS ON YOUR PURCHASE

Our aim at Better Bathrooms is to bring you extraordinary bathroom products for less.

If you're after a modern, traditional, or totally unique bathroom style, we have the fittings and fixtures to bring your ideas to life so you can fall in love with your space every day.

We hope your new product goes above and beyond your expectations. However, should any problems occur, please:

- Log in to your account and contact our customer services team via your self-service portal – betterbathrooms.com/CustomerAccount/Login
- Contact us via betterbathrooms.com/contact/contact-us

CONTENTS

SAFETY	3
BATHROOM ZONES	4
PARTS SUPPLIED	5
TOOLS REQUIRED	5
DIMENSIONS	6
INSTALLATION	8
DOOR ADJUSTMENT	13
SHELF ADJUSTMENT	14
OPERATION	14
CLEANING AND MAINTENANCE	15
TECHNICAL SPECIFICATIONS	15

SAFETY

- Installation must only be carried out by a qualified professional or electrician.
- This fitting is only suitable for connection to a 220- 240V~ earthed supply in accordance with current IEE wiring regulations and should be installed in accordance with local Building Regulations.
- This is for domestic, indoor use only.
- The fitting should be connected to a dedicated lighting circuit, which must be protected by a 5-amp fuse (or a 6-amp miniature circuit breaker).
- Before installing the fitting, ensure the mains supply is switched off and that the appropriate fuse is removed (or the appropriate circuit breaker is switched off) before commencing installation. Ensure that measures are taken to prevent the supply from being inadvertently reconnected.
- If there is a “Minimum Distance” Label, please do not allow Flammable Materials to rest within that distance from the unit.
- This product may contain delicate parts – be careful during handling and maintenance to avoid breakage.
- Any modification to the fitting will invalidate the warranty and may render the product unsafe.
- A defective appliance may cause an electric shock. Never switch on a defective or damaged appliance. Disconnect the appliance from the mains before seeking assistance.
- This product is IP44 rated, and no part of the installation is allowed to be within bathroom Zones 0 or 1. Installation is permitted within Zone 2.
- This product must be earthed. Before commencing installation, ensure there are no pipes or wires behind the wall that could be damaged during drilling.
- Ensure that the hanging location has been decided upon and marked clearly to avoid unwanted damage to the wall due to incorrect positioning.
- Inspect the mirror to ensure there are no signs of damage prior to installation.
- Take care of unpacking, and do not use a sharp blade to open it, as this may damage the mirror and void your warranty.
- Installation must only be carried out by a qualified professional or electrician.
- Once installed, silicone can be applied between the cabinet and the wall around the unit. Don’t seal the bottom of the cabinet, as this may allow water to accumulate behind it.
- If the external flexible cable or cord of this luminaire is damaged, it shall be exclusively replaced by the manufacturer, its service agent or a similarly qualified person in order to avoid a hazard.
- To reduce the risk of strangulation, the flexible wiring connected to this luminaire shall be effectively fixed to the wall if the wiring is within arm's reach.
- The light source of this luminaire is not replaceable; when the light source reaches its end of life, the whole luminaire shall be replaced.

BATHROOM ZONES

If the appliance is to be fitted within a bathroom, a good understanding of the zoning within bathrooms is required to ensure the unit is mounted in a safe position. The appliance is rated as IPX4 and should be installed outside of Zones 0 -2. We would advise that when the unit is fitted within a bathroom, the plug is removed from the unit, and a suitable fused spur is installed in accordance with BS 7671. In addition, when used in a bathroom, it must be protected by a suitable RCD to prevent the risk of electric shock, and it must not be immersed in water during cleaning.

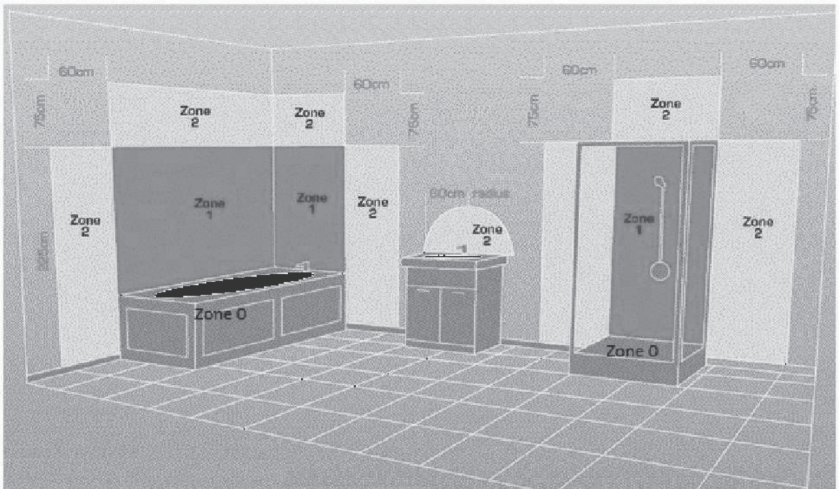

Zone 0:	The interior of the bathtub or shower basin.
Zone 1:	The area around the bathtub or shower basin up to a height of 2.25m above the floor.
Zone 2:	The area stretching to 0.6m outside the bath or shower and above the bath or shower if over 2.25m.

PARTS SUPPLIED

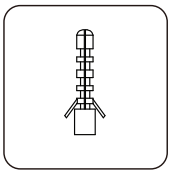

Wall Plugs (x5)

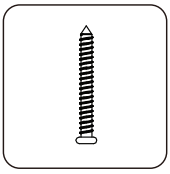

SCREWS M5 (x5)

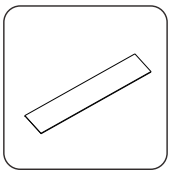

SIDE PANELS (x2)

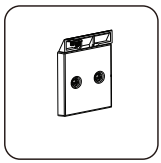

HANGING BRACKET (x2)

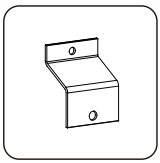

ANTI-PULL FITTING (x1)

PLEASE NOTE: It is the installer's responsibility to ensure that the fittings are suitable for the type of wall. The provided parts are only suitable for masonry walls. Alternative fittings may be required (Not Supplied). If unsure, seek professional advice.

TOOLS REQUIRED (not supplied)

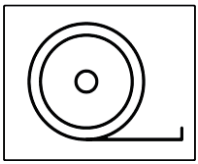

TAPE MEASURE

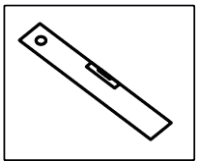

SPIRIT LEVEL

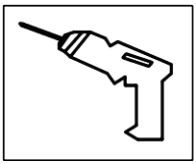

ELECTRIC DRILL

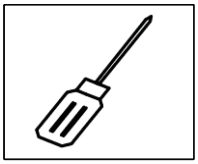

SCREWDRIVER

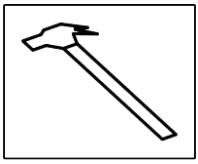

HAMMER

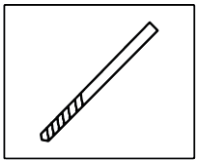

8mm DRILL BIT

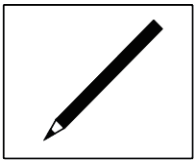

PENCIL

DIMENSIONS

EMPIRECBB1200
/EMPIRECMB1200

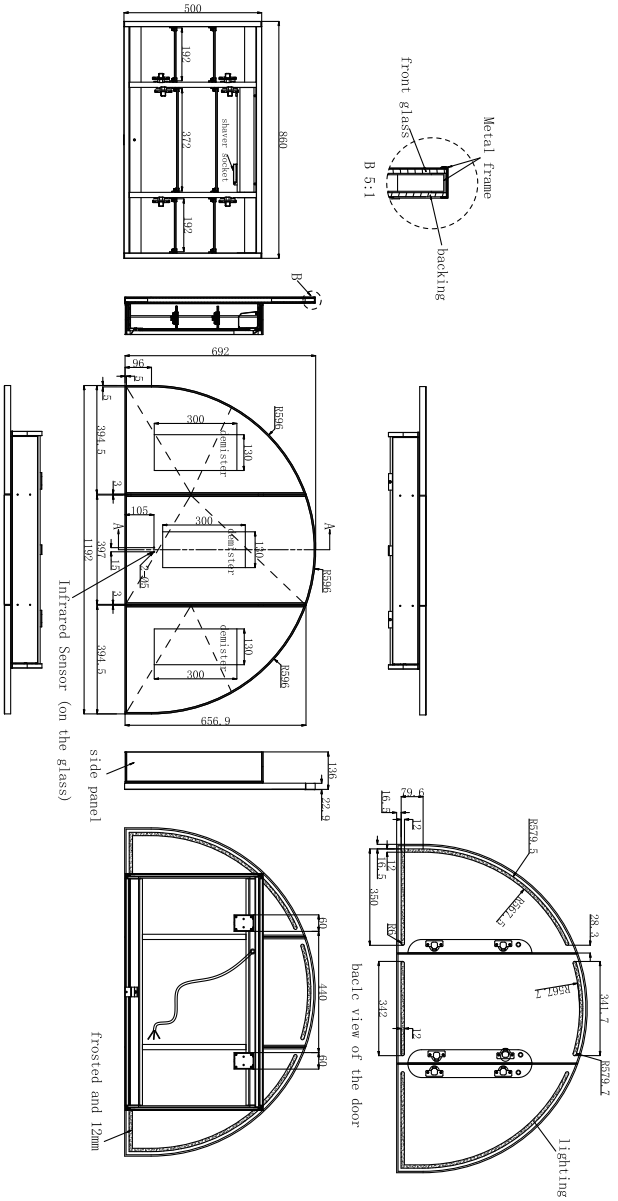

NOTE: All diagrams are for illustrative purposes. All dimensions are in mm

DIMENSIONS

EMPIREC1200

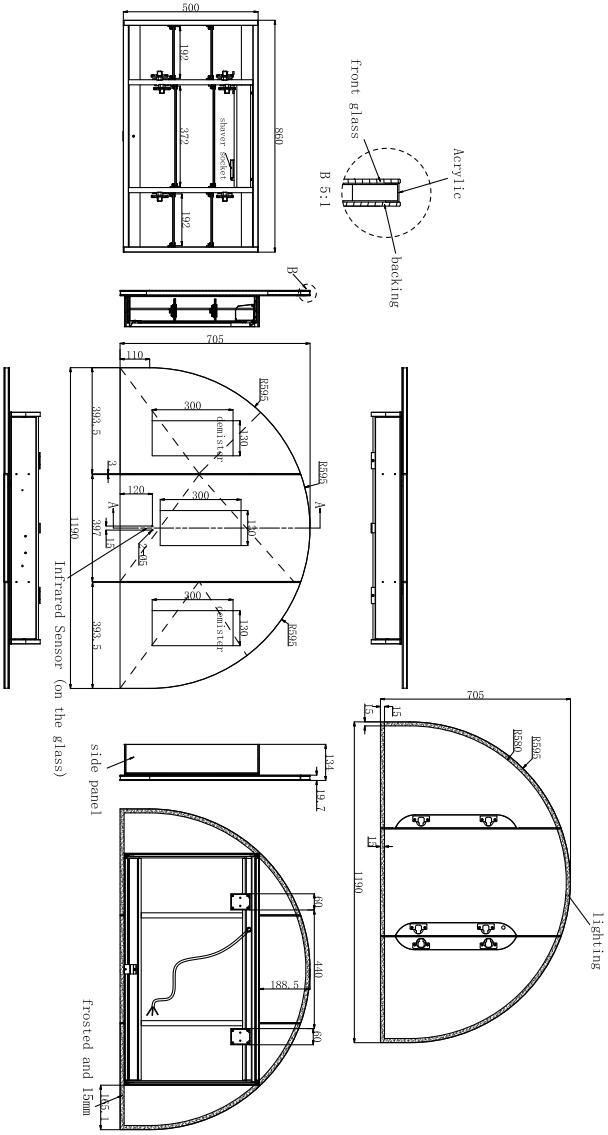

NOTE: All diagrams are for illustrative purposes. All dimensions are in mm

INSTALLATION

- **IMPORTANT:** Before commencing installation, ensure that there are no pipes or wires located behind the wall that you will be drilling into.
- **IMPORTANT:** The power must be disconnected when installing and performing any maintenance. The product dimensions are on page 6; alternatively, you can use the holes on the back of the mirror as a guide.
- Ensure that the hanging location has been decided upon and marked clearly to avoid unwanted damage to the wall due to incorrect positioning.
- Check that the mirror is not damaged before installation.
- Take care of unpacking, and do not use a sharp blade to open it, as this may damage the mirror and void your warranty.

WALL MOUNT INSTALLATION

The cabinet includes a set of wall-mounting brackets.

At the back of the cabinet, there is a hanging bar which is designed to slot onto the hanging brackets.

1 Choose the desired cabinet position, then determine the required position of the hanging brackets.

2 Use a pencil to mark the position of the four holes on the wall.

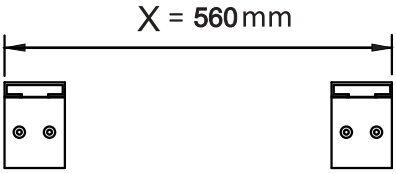

3 Hold the hanging brackets in position and use a spirit level to ensure they are level.

4 Place the hanging brackets to one side, then drill the holes using a suitable drill bit.

5 Insert wall plugs into the holes, ensuring they are flush with the wall.

6 Place the hanging brackets onto the wall, lining up the four holes with the wall plugs.

7

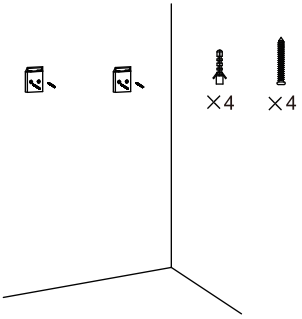

Secure the hanging brackets to the wall using the supplied screws.

8 Install the side panels by sliding them into the fittings before installing the cabinet on the hanging brackets.

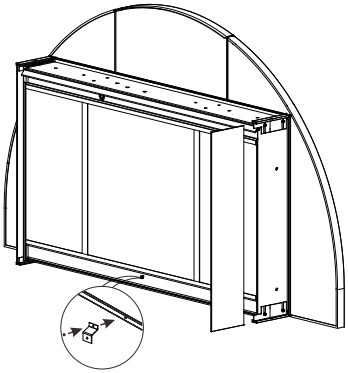

9 There is a screw hole at the bottom centre of the back of the cabinet.

Fix the anti-pull fitting to the hole with a screw.

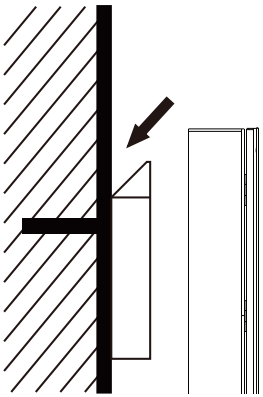

10 You can now hang the cabinet.
Carefully lower the cabinet onto the hanging brackets, ensuring that it is secure and will not slide.

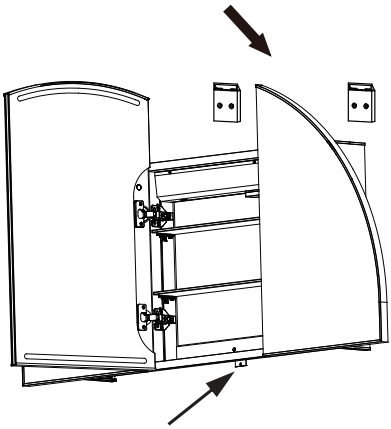

11 Mark the wall with a pencil through the security hole on the anti-pull fitting.

12 Remove the cabinet, drill a hole, and place a wall plug into it.

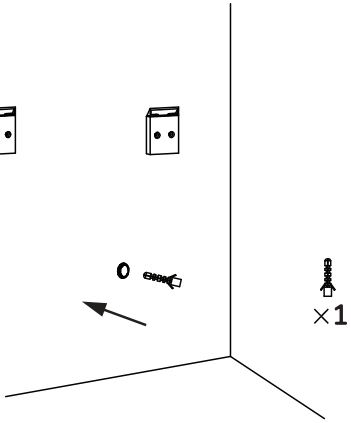

13 Hang your cabinet back up on the hanging brackets and ensure it is lined up with the wall plug.

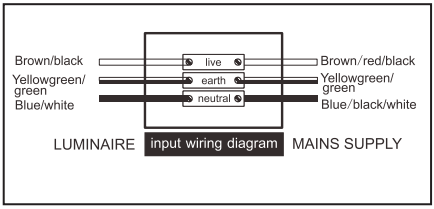

The cabinet should now be connected to a suitable fused spur in accordance with current regulations and guidance. We would advise that this be situated directly behind the cabinet, below the hanging brackets. When connecting, ensure that enough cable is left to allow the cabinet to be safely removed from the hanging brackets.

14 Secure the cabinet to the wall using a screw through the security hole and into the wall plug you previously installed.

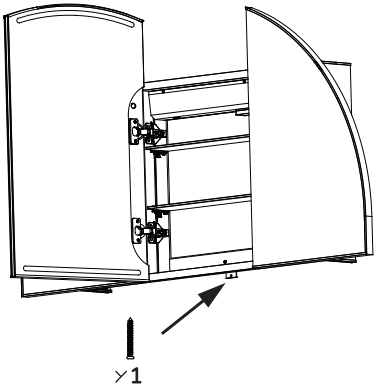

RECESSED MOUNT INSTALLATION

1 Positioning and Installation of Mirror Cabinet.

2 Unscrew the screws at the four corners of the cabinet to remove the fittings.

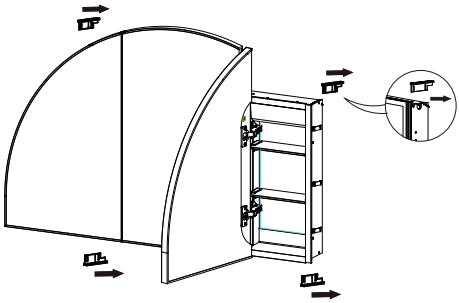

3 Tighten the screws at the four corners of the cabinet, then remove the metal supports in the two side panels (x6).

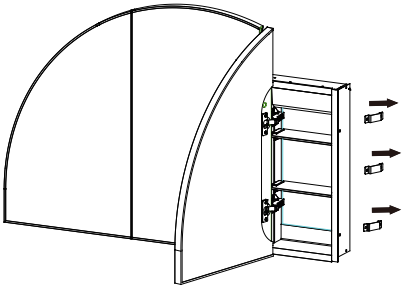

4 Unscrew the screws on the hanging bar and remove it.

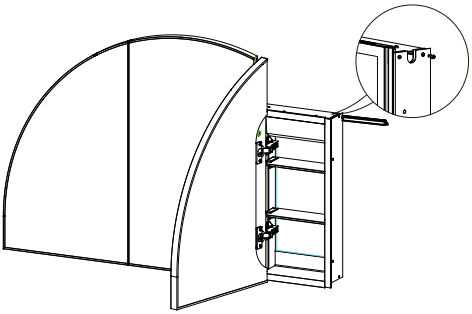

5 Measure the dimensions of the cabinet.

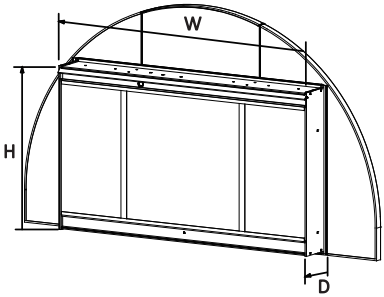

6 According to the measured cabinet size, cut a corresponding hole in the wall.

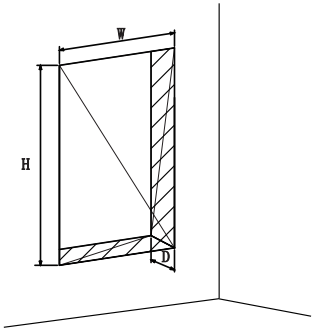

7 Place the cabinet into the wall hole, then open the door, remove the hole caps (x4) from the two side panels.

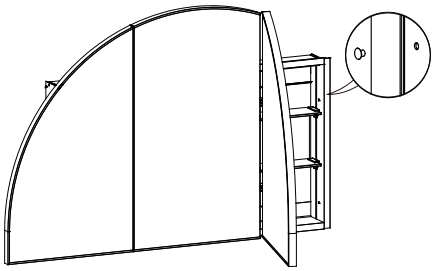

8 Mark the wall with a pencil through the fixing holes on the two side panels.

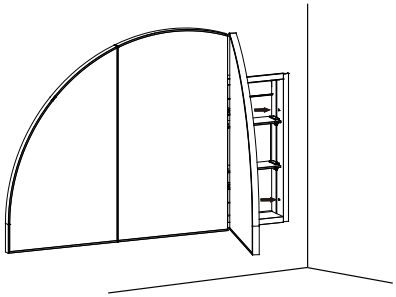

9 Place the cabinet to one side and drill the holes (X4) with a suitable drill bit.

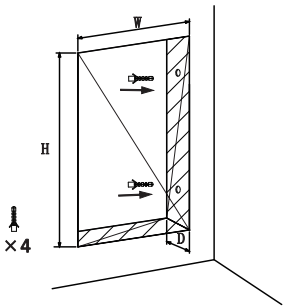

10 The cabinet should now be connected to a suitable fused spur in accordance with current regulations and guidance. We would advise this to be situated directly behind the cabinet below the hanging bar. When connecting, ensure that enough cable is left to allow the cabinet to be safely removed from the wall.

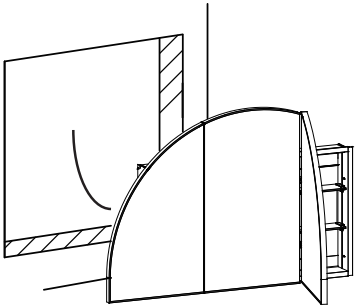

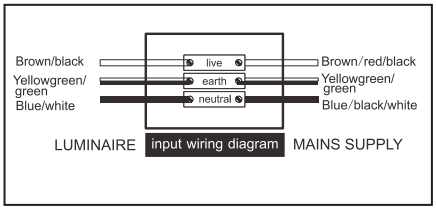

11 Put the cabinet into the wall.

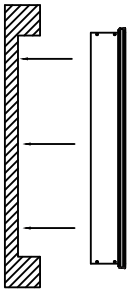

12 Open the door, then secure the cabinet to the wall using screws through the holes on both sides and into the wall plugs you previously installed.

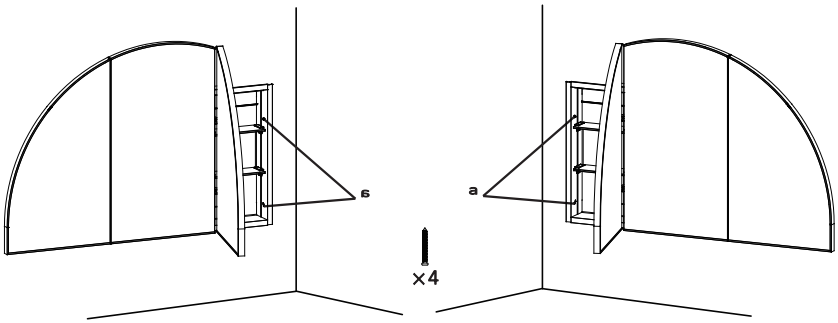

DOOR ADJUSTMENT

If the door is not level, you can adjust it using the hinge screw.

Turning the screw clockwise will push the door to the right, and turning it anticlockwise will pull it to the right.

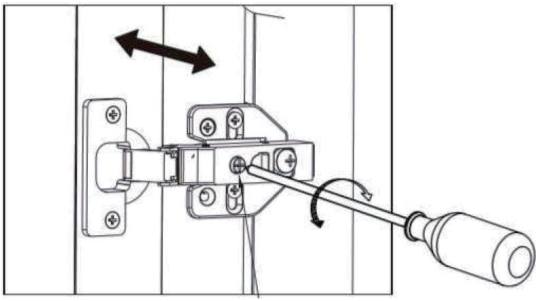

SHELF ADJUSTMENT

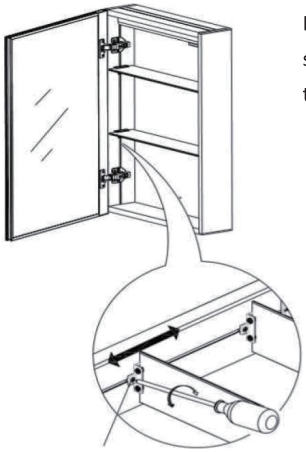

Loosen the snap screw on the shelf to adjust the shelf position. Once the shelf is in the correct position and level, the screw should then be re-tightened.

OPERATION

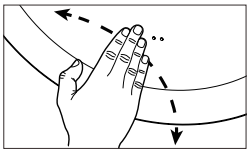

Infrared switch on the Mirror

Turning On/Off & Color Temperature Control:

Wave your hand across the sensor on the front of the mirror, approximately 5 cm away, to operate the light and demisting pad:

- 1st wave: Turns on the light (defaulting to the first color temperature) and activates the demisting pad.
- 2nd wave: Switches to the second color temperature.
- 3rd wave: Switches to the third color temperature.
- 4th wave: Turns off the light and demisting pad completely.

Note: To turn off the light, you must cycle through all color temperature modes first. The demisting pad is active only when the mirror light is on.

SHAVER SOCKET



Your cabinet comes with an in-built shaver socket located inside the unit. This socket is designed only for use with shavers and other low-voltage items powered from a shaver socket.

Once the cabinet is connected to the mains, the shaver socket is ready to use.

CLEANING AND MAINTENANCE

Never use products containing bleach or abrasive cleaners, as this willharm the product's appearance and lifespan.

Use a clean microfibre cloth to clean the mirror.

TECHNICAL SPECIFICATION

Model	EMPIREC1200	EMPIRECBB1200/EMPIRECMB1200
WxHxD (mm)	1190x705x134	1192x692x136
Net Weight (Kg)	23.3	22.6
Power Cord length (cm)	85	85
Rated Power (W)	44	49
IP Rating	IP44	IP44
Input	220V-240V 50Hz	220V-240V 50Hz

This product contains a light source with an energy efficiency class of F and an LED light source that is not replaceable.



Non-replaceable light source

DISPOSAL

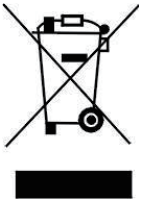

Recycling facilities are now available for all customers at which you can deposit your old electrical products. Customers will be able to take any old electrical equipment to participating sites run by their local councils.

Please remember that this equipment will be further handled during the recycling process, so please be considerate when depositing your equipment. Please get in touch with the local council for details of your local household waste recycling centres.

At the time of printing the product contains no substances listed within Annex XIV of the Reach Regulations (EC) 1907/2006. In accordance with Article 59 of the same regulation, the following substances are contained within the product at permitted levels: Cadmium.

As a responsible manufacturer, we monitor the regulations to ensure continued compliance. Further information can be provided upon request.

For more information

- visit betterbathrooms.com
- email customerservices@buyitdirect.co.uk
- call 0330 390 3062
- write to Trident Business Park, Neptune Way, Huddersfield, HD2 1UA

better bathrooms

Part of the BuyItDirect Group